SINGLE LINE DIAGRAM OF SAINTHIA 132 KV SUB-STATION
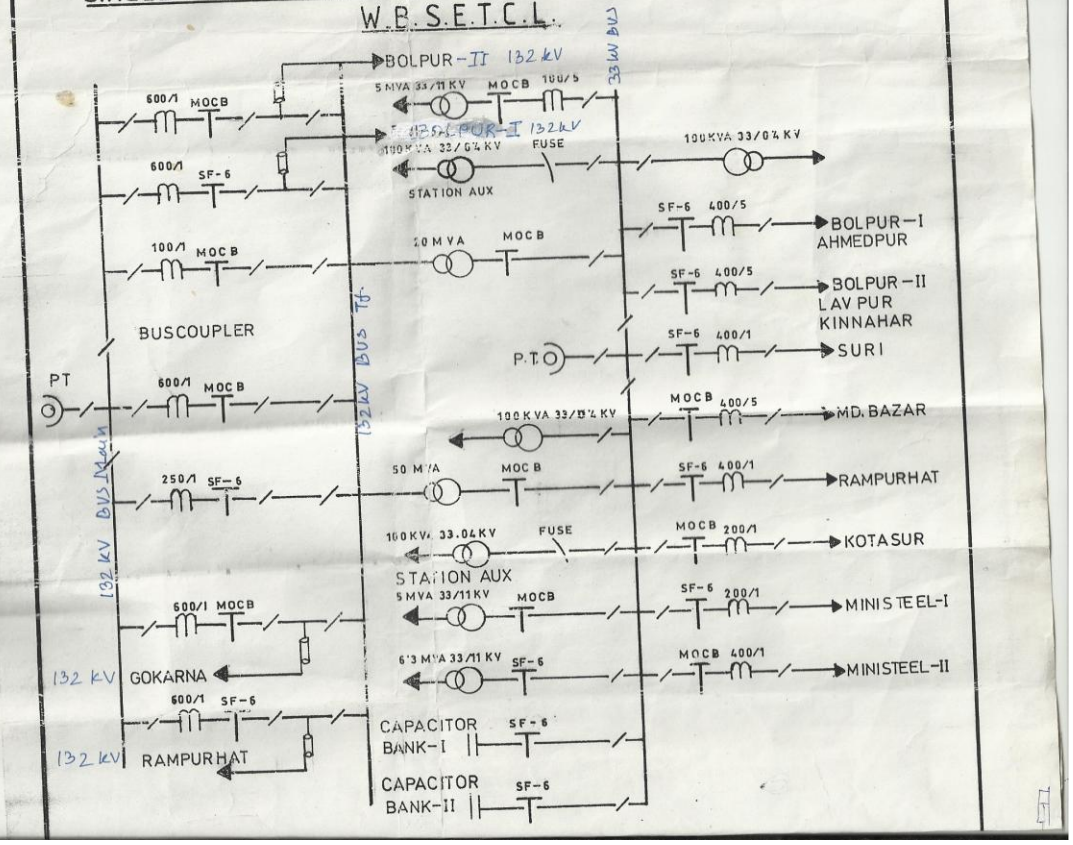
W.B.S.E.T.C.L.